Scientific Research and Essays Vol. 6(13), pp. 2729-2736, 4 July, 2011
Available online at http://www.academicjournals.org/SRE
DOI: 10.5897/SRE11.120
ISSN 1992-2248 ©2011 Academic Journals

Full Length Research Paper

Predicting Surface Roughness of AISI 4140 Steel in Hard Turning Process through Artificial Neural Network, Fuzzy Logic and Regression Models

Harun Akkuş[1] and İlhan Asilturk[2]*

[1]Faculty of Technology, Selcuk University, 42075, Konya, Turkey.
[2]Purdue School of Eng. and Tech. IUPUI, Indianapolis, IN, 46202, USA.

Accepted 30 May, 2011

In this study, the average surface roughness values obtained when turning AISI 4140 grade tempered steel with a hardness of 51 HRC, were modeled using fuzzy logic, artificial neural networks (ANN) and multi-regression equations. Input variables consisted of cutting speed (V), feed rate (f) and depth of cut (a) while output variable was surface roughness (Ra). Fuzzy logic and ANN models were developed using Matlab Toolbox. Variance analysis was conducted using MINITAB. The predicted values of mean squared errors (MSE) were employed to compare the three models. Results showed that the optimum predictive model is the fuzzy logic model. With small errors (e.g MSE = 0.0173166), the model was considered sufficiently accurate.

Key words: Hard turning, surface roughness, artificial neural network, fuzzy logic model, multi regression model.

INTRODUCTION

Quality plays a significant role in today's manufacturing market, as it directly influences the degree of satisfaction of its consumers. A major indication of surface quality on machined parts is surface roughness.

Typically, selected cutting operations have limited capability of attaining the required surface roughness. However, it is necessary to determine optimal cutting parameters in order to achieve minimal expenses or minimal cost/production time. Researchers have applied different methods for prediction of optimal cutting parameters.

Hard turning is a process, workpieces, with hardness ranging from 50 to 70 HRC, are machined at low depths by using cutting tools of high hardness and wear resistance (Singh and Rao, 2007). The hard turning is also defined as the process in which workpieces with minimum hardness value of 45 HRC are machined by using suitable inserts (Chavoshi and Tajdari, 2010). In recent years, tools and parameters have been chosen based on the hardness of the material. The advantages in machining materials with higher hardness include decrease in machining cost/time, improved surface quality time, reduced finish machining time and elimination of deformities caused by temperature (Aslan and Camuscu, 2007).

Predicting surface roughness value before machining parts on a CNC lathe is very important. Improving quality and reducing cost, is possible by choosing optimum cutting parameters, using predictive models not the trial-and-error method (Asilturk, 2007).

Dimla (1999) achived the application of perceptron-type neural networks to tool-state classification during a metal-turning operation.

An in-process surface roughness adaptive control (ISRAC) system in end milling operations was developed by Zhang et al. (2007), who employed a multiple regression algorithm to establish two subsystems: the in-process surface roughness evaluation (ISRE) subsystem and the in-process adaptive parameter control (IAPC) subsystem. These systems included not only machine cutting parameters such as feed rate, spindle speed, and depth of cut, but also cutting force signals measured by a

*Corresponding author. E-mail: iasilturk@yahoo.com

dynamometer. The multiple-regression-based ISRE subsystem predicted surface roughness during the finish cutting process with an accuracy of 91.5%. The integration of the two subsystems led to the ISRAC system. The testing produced 100% success rate for adaptive control, demonstrating that the proposed system could be implemented to adaptively control surface roughness during milling operations. This research suggested that multiple linear regressions were straightforward and effective for in-process adaptive control.

Samanta et al. (2008) modeled surface roughness in end-milling using soft computing (SC) or computational intelligence (CI) techniques. The techniques included artificial neural network (ANN) and adaptive neuro-fuzzy inference system (ANFIS). The procedure was demonstrated for the case of end-milling 6061 aluminum alloy. Although, statistically, all three models predicted roughness with satisfactory results, the test performance of ANFIS was better than ANN and MRA. In comparison with MRA, the performance of ANN was better in training but similar in prediction. The results showed the effectiveness of CI techniques in modeling surface roughness.

Risbood et al. (2003) conducted a study on machining hot-rolled steel containing 0.35% C with a hardness of 130 Brinell. They used the obtained data in predicting surface roughness with the help of ANN technique. Inputs of the system were cutting speed, feed rate, depth of cut, radial vibrations on the chuck and the cutting liquid, while the output was surface roughness. Lin et al. (2001) developed a predictive modeling for cutting force and surface roughness using abductive network. They created an optimum network hierarchy based on the value of predicted square error (PSE). They entered cutting speed, feed rate and depth of cut into the system and obtained surface roughness and cutting force. They conducted 27 different experiments in total.

Ilkaz (2002) developed a fuzzy logic model for turning. The author specified cutting parameters according to hardness of the material to be machined, material of the insert and power of the machine tools to be used. He prepared the fuzzy logic model by using Matlab's Fuzzy Toolbox. Abburi and Dixit (2006) developed a model with a data system for surface roughness obtained in turning process with/without cutting liquid. They entered cutting speed, feed rate, depth of cut and radial vibrations into the system and obtained Ra. Turning soft steels with high speed steel (HSS) using carbide tools was performed. They modeled the system using artificial network and fuzzy logic based on the obtained results.

Ozkan (2006) modeled tangential cutting force, radial force, feed rate and temperature of inserts with different rake angle, approximation angle and cutting speed values by using fuzzy logic, artificial neural network and fuzzy neural network techniques. Davim et al. (2008) developed a predictive model in turning for surface roughness by using ANN. The model used cutting speed, feed rate and depth of cut, as process parameters. Each factor was restricted to three levels based on L_{27} orthogonal array experiments. The ANN model was trained through error back-training algorithm (EBTA). They reported that cutting speed and feed rate significantly reduced surface roughness while depth of cut increased it.

Karayel (2009) used St 50.2 grade steel as test material. Three inputs were used in the experiments, namely, depth of cut, cutting speed and feed rate. However, other parameters like nose radius, tool ridge, approximation angle, length of work piece and material of workpiece were not considered. The author measured three different surface roughness values, Ra, Rz and Rmax in the experiments as output. A feed-forward multi-layer ANN was trained and tested by using the data obtained from the experiments. Next, the network was trained by using scaled conjugate gradient algorithm (SCGA). The author did not choose the adaptive learning rate before training, but minimized it during the training. Model architectures with one hidden layer and 10 neurons were used in the Ra model. Five of them were for Rz and the others were for Rmax. Results of the ANN approach were compared with the actual data. In addition, the author developed an approach for surface roughness control. It was found that the results from the ANN model were in correlation with the actual experimental results.

Neseli et al. (2009) machined 27 test samples made from AISI 1040 grade steel with a depth of cut of 0.5 mm in their turning study, conducted using different approximation and cut angles, under dry cutting conditions. They measured average surface roughness (Ra) values of these samples. They used the data obtained from the experiments in training the ANN model. They used nose radius, approximation angle and rake angle input for the ANN model, and Ra as the output.

Chavoshi and Tajdari (2010) machined AISI 4140 grade steel with hard turning process by using CBN inserts with hardness (H) and cutting speed as variables to study the variation of Ra value. They conducted 18 experiments in total. They kept feed rate and depth of cut constant. The models, which were produced using regression and ANN, were used in specifying optimum parameters for surface roughness. The obtained accuracy of hardness prediction was acceptable; however work cycle prediction was not at the desired accuracy level. As a result, they concluded that hardness had a significant effect on surface roughness.

Gupta (2010) undertook a study to calculate surface roughness, tool wear and the required power depending on cutting speed, feed rate and cutting time. 27 experiments in total were conducted. The obtained data was used to develop models using response surface methodology (RSM), ANN and support vector regression (SVR) methods. The results showed that ANN and SVR

Table 1. Chemical composition of AISI 4140 grade steel.

C	Si	Mn	P	S	Cr	Mo	Ni	Al	Cu	Sn
0.40	0.28	0.88	0.016	0.002	0.91	0.17	0.19	0.017	0.13	0.008

models yielded higher accuracy than the RSM model.

Surface quality in milling process depends on several factors: rotational speed, feed rate, cutting depth, tool geometry and run out errors. Rosales et al. (2010) presented a method for the estimation of surface roughness, starting from measured cutting forces in face milling. The proposed method was verified experimentally for a wide range of cutting conditions, and gave significantly better predictions for surface roughness.

Bharathi et al. (2010) developed empirical models for machining time and surface roughness to explore optimized machining parameters in turning operation. A CNC turning machine was employed to conduct experiments on brass, aluminum, copper, and mild steel. Particle swarm optimization (PSO) was used to find the optimal machining parameters for minimizing machining time subjected to desired surface roughness. Physical constraints for both experimental and theoretical approach consist of cutting speed, feed, depth of cut, and surface roughness. It was observed that the machining time and surface roughness based on PSO have nearly the same values as those obtained from confirmation experiments; hence, it was concluded that PSO is capable of selecting appropriate machining parameters for turning operation.

In hard turning, the selected parameters during the process have essential impact on tool/machine life and costs of products. Surface roughness also affects heat transfer, formation of lubrication films, reflection of light and coating properties, in addition to mechanical properties such as wear of the machine parts, corrosion resistance, friction, and fatigue strength. In academia and industry, there is a huge interest in surface roughness because of its effect on work piece quality and efficiency.

In this study, surface roughness is predicted here as a function of three different parameters, namely, cutting speed, feed rate and, depth of cut. In addition, this is the first work to evaluate and compare the ANN, FL and regression models of hard turning, namely, ANN, fuzzy logic and regression in literature.

MATERIALS AND METHODS

In this study, a workpiece made of AISI 4140 grade steel was used. This material was chosen because of its wide use in manufacturing machinery parts, gear wheels, tie rods, bolts, pins and shaft requiring high resistance. Table 1 shows the chemical composition of the test material. The workpiece size was Ø110 x 600 mm. Oxide layers and burrs were removed from its surface and center holes were drilled before thermal treatment. The steel was tempered at 880°C for an hour and quenched at 280°C for 2 h to eliminate stresses and to reduce hardness. As a result, hardness of the material was decreased from 62 HRC to 51-57 HRC. Next, the workpiece was machined on a CNC lathe to eliminate deformities in size and swings. The experiments were conducted on a Mori Seiki-make NL 2500 CNC lathe in ISOMER Research Center in Selçuk University. The machining was performed under dry conditions.

MWLNR 2525M-0.8W tool holder and Al_2O_3 and TiC coated ISCAR-make WNMA 080408 IC5005 inserts were used. Three different cutting speeds, feed rates, and depths of cut were specified according to the manufacturer's catalog. 27 experiments were conducted in total based on full factorial experimental design. Surface roughness value corresponding to these cutting parameters was measured off-line with a surface roughness measuring device: Mitutoyo SJ 301P. The experiments were conducted with three replicates and arithmetical mean was calculated. A schematical representation of the experimental setup is depicted in Figure 1. Table 2 shows the measured values (Akkus, 2010).

Modeling surface roughness based on the results of the experiments

Modeling of Ra using artificial neural networks

An ANN obtains new knowledge through learning the features of the human brain, such as the ability to discover and create new knowledge without any assistance in order to run automatically developed computer software. An ANN maps input space to the output space and is trained to minimize the error between the predicted and the actual output values. Input samples are characterized by a numeric feature vector. Input and output pairs available in the training data are provided to ANN one by one and ANN updates the weights at each node to minimize the mean square error. This process is known as training and it continues until the termination criterion is met. The termination criterion is usually defined by the maximum number of iterations or the change in error between any two iterations. Once the training is completed ANN can be used to predict the outputs of new samples. This process is known as testing. ANNs consist of a large number of processor elements, also known as neurons, operating in parallel. Computing with ANNs is non-algorithmic. They are trained through examples rather than programmed by software. More detailed information concerning ANNs can be found in the literature (Findik et al., 2010; Ozel and Karpat, 2005; Ozdeniz and Yilmaz, 2009).

Experimental results were used to develop an ANN model for predicting surface roughness by using Matlab Neural Network Toolbox. There were three inputs and one output in the ANN model. Input variables were V, f and a, and output variable was Ra. 21 results from total 27 results obtained from the experiments were used in training the network. The remaining data were used for testing. Table 3 shows the experimental data chosen for testing. Many network architectures were tried. Then, the network structure of 3X3X3X1 (with the lowest MSE), which yielded the best results, was used. The chosen network structure is shown in Figure 2. The Feed-forward back propagation algorithm, Levenberg-Marquardt (LM) training function and tan-sigmoid activation function, were used to train the ANN. Neurons are arranged in the form of layers in the feed forward ANN, and output of the cells in a layer are fed to the next layer through weights as input. Two hidden layers were used and training of the ANN was completed in 1698 cycles.

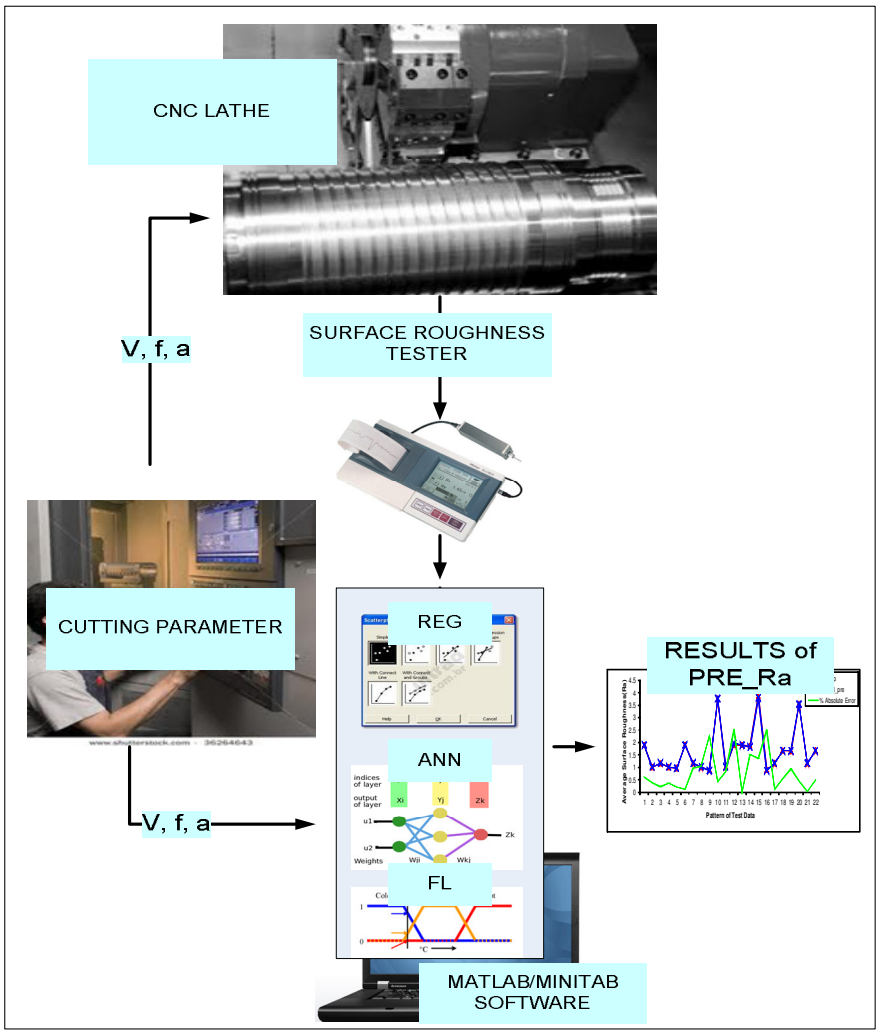

Figure 1. The experimental setup.

Performance of the network is determined with MSE which should be minimized. MSE is calculated with the help of Equation (1). Table 4 shows the predicted Ra values, which were obtained by the ANN for test data. The MSE value, obtained from the ANN, was found to be 0.0497795.

$$MSE = \frac{1}{Q}\sum_{k=1}^{Q} e(k)^2 = \frac{1}{Q}\sum_{k=1}^{Q}[t(k) - y(k)]^2 \quad (1)$$

where e(k) the error between the target and ANN output, t(k) target output, y(k) ANN output value, and Q is the number of total data (Findik et al., 2010).

Modeling of Ra using fuzzy logic

Fuzzy logic forms theoretical fuzzy set mathematically. It shows the knowledge and experience in mathematical format. Process and system dynamics' characters are defined as fuzzy and functions related to fuzzy sets. Control decision is produced by using fuzzy sets and function. Although fuzzy control has a great potential to solve the complex control algorithms, design procedure is very complex and specific. Additionally fuzzy mathematics do not belong the area of mathematics and there is no basic mathematical operator. For example, there is no reverse adding in fuzzy mathematics. It is very hard to solve fuzzy equations. To solve diverse equations, applications and practice of traditional control theory are used. So, in the absence of mathematical tools, fuzzy control problem become solvable (Asilturk et al., 2006).

A fuzzy expert system with multiple inputs and a single output was designed and developed using Matlab Fuzzy Toolbox. For the modeling fuzzy logic inference mechanism was adopted Mamdani approach. Figure 3 shows the structure of the developed fuzzy logic model. Input variables were cutting speed, feed rate and depth of cut. These variables were defined by using three membership degrees and triangle membership function. Cutting speed, feed rate and depth of cut values were divided into three linguistic expressions, namely, Low (L), Medium (M) and High (H). Surface roughness was converted into eleven linguistic expressions, namely, Very Very Very Very Low (VVVVL), Very Very Very Low (VVVL), Very Very Low (VVL), Very Low (VL), Low (D), Medium (M), High (H), Very High (VH), Very Very High (VVH), Very Very Very High (VVVH) and Very Very Very Very High (VVVVH). 27

Table 2. Sequence of experiments and experimental Ra.

Number	V (m/min)	f (mm/rev)	a (mm)	Ra (μm)
1	90	0.18	0.2	0.95
2	90	0.18	0.4	1.21
3	90	0.18	0.6	1.84
4	90	0.27	0.2	1.69
5	90	0.27	0.4	1.78
6	90	0.27	0.6	2.71
7	90	0.36	0.2	3.04
8	90	0.36	0.4	3.1
9	90	0.36	0.6	3.19
10	120	0.18	0.2	0.94
11	120	0.18	0.4	1.28
12	120	0.18	0.6	1.55
13	120	0.27	0.2	2.11
14	120	0.27	0.4	2.13
15	120	0.27	0.6	2.27
16	120	0.36	0.2	2.82
17	120	0.36	0.4	3.55
18	120	0.36	0.6	3.72
19	150	0.18	0.2	1.14
20	150	0.18	0.4	1.21
21	150	0.18	0.6	1.25
22	150	0.27	0.2	2.14
23	150	0.27	0.4	2.35
24	150	0.27	0.6	2.59
25	150	0.36	0.2	3.63
26	150	0.36	0.4	3.87
27	150	0.36	0.6	4.09

Table 3. Selected data for testing.

Experimental number		1	2	9	14	16	24
	V (m/min)	90	150	90	120	120	150
Input	f (mm/rev)	0.18	0.18	0.36	0.27	0.36	0.27
	a (mm)	0.2	0.4	0.6	0.4	0.2	0.6
Output	Ra (µm)	0.95	1.21	3.19	2.13	2.82	2.59

rules in total were established with experimental data and experts views.The results of the fuzzy logic model (FLM) are given in Table 5. The MSE value was calculated as 0.0173166 at the end of the FLM.

Modeling of Ra using regression

Multiple regression is a statistical technique that determines the correlation between a continuous dependent variable and continuous or discrete independent variables. It can be used with different data types, including continuous, ordinal, and categorical data. Thus, it is well-suited for predicting the surface roughness where the goal is to find correlations between surface roughness and multiple machining parameters (Cakir et al., 2009; Asilturk and Cunkas, 2010; Reddy et al., 2008).

The regression equation was obtained using Minitab 14 software. Ra values were modeled as first and second and logarithmically order multi-regression models. Specify the evaluation of regression coefficients (R^2) for Ra were follows: with the first regression model R2 was 94.1%. In the second regression model, R2 was 97.6% and with a logarithmic regression model R2 was 91.5%. The second order multi-regression model was found to be optimum with a MSE value of 0.0349818. The second order regression equation used to compute Ra values is as follows (Equation 2). Table 6 shows the results from second order regression model.

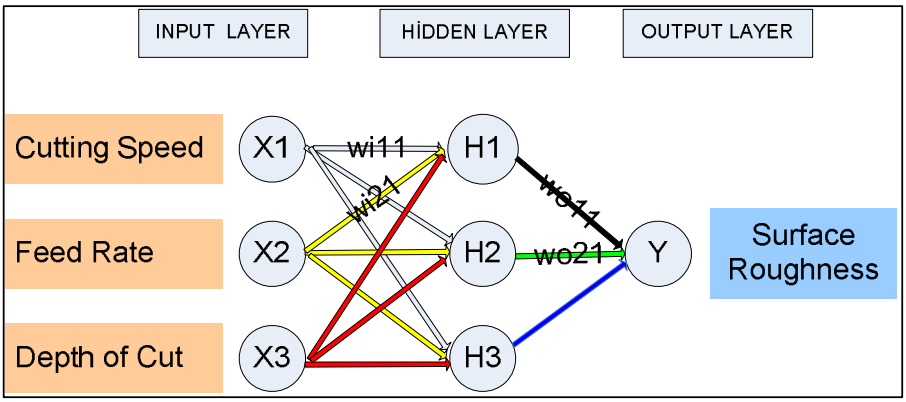

Figure 2. Basic structure of Ra to predict neural network model.

Table 4. The results of experimental and ANN_Ra.

Experimental number	Experimental Ra (µm)	ANN-Ra (µm)
1	0.95	1.1560
2	1.21	1.3973
9	3.19	3.3403
14	2.13	2.1445
16	2.82	3.2284
24	2.59	2.4124

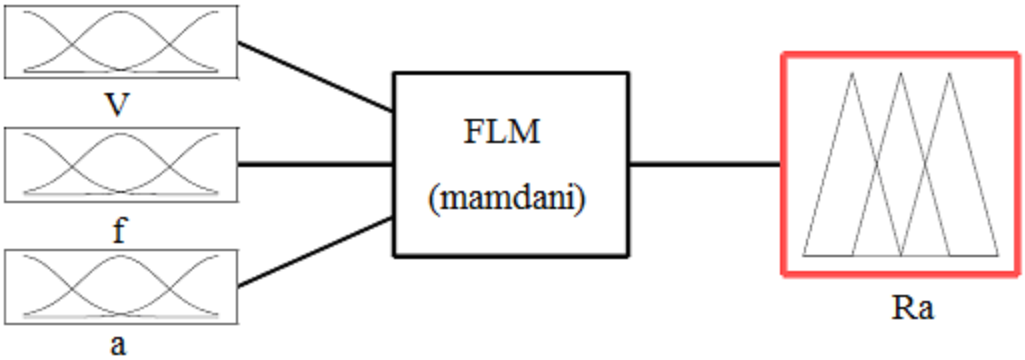

Figure 3. For Ra the developed fuzzy logic model.

$$Ra = 2,14-0,0267V-8,06f+2,39a+0,000064V^2+19,5f^2+0,99a^2+0,0821Vf-0,0144Va-0,46af \quad (2)$$

Comparison of different predictive models

The average MSE values of three different models are given in Table 7. According to results of the MSE, the fuzzy logic model produced the best prediction for Ra, followed by the second order regression model, then the artificial neural network model. Comparison of the experimental results and those obtained through three different methods is given in Figure 4.

RESULTS AND DISCUSSION

As shown in Figure 4, FLM gives the best values for Ra and MSE obtained as 0.0173166. It is clear that the values predicted by FLM are very close to experimental values. The results of experiments demonstrate the ability of the proposed system to effectively predict surface roughness cutting conditions commonly encountered in turning operations (Cakir et al., 2009; Samanta et al., 2008; Ribood et al., 2003). As a result of

Table 5. The Results of Experimental and FLM_Ra.

Experimental number	Experimental Ra	FLM Ra
1	0.95	0.93
2	1.21	1.27
9	3.19	3
14	2.13	2.3
16	2.82	3
24	2.59	2.64

Table 6. The Results of Experimental and Reg_Ra.

Experimental number	Experimental Ra	Regression- Ra
1	0.95	1.00826
2	1.21	1.3293
9	3.19	3.45448
14	2.13	2.13651
16	2.82	3.1688
24	2.59	2.56528

Table 7. The values of MSE for developed prediction models.

Model	FLM	ANN	2nd regression
MSE	0.0173166	0.0497795	0.0349818

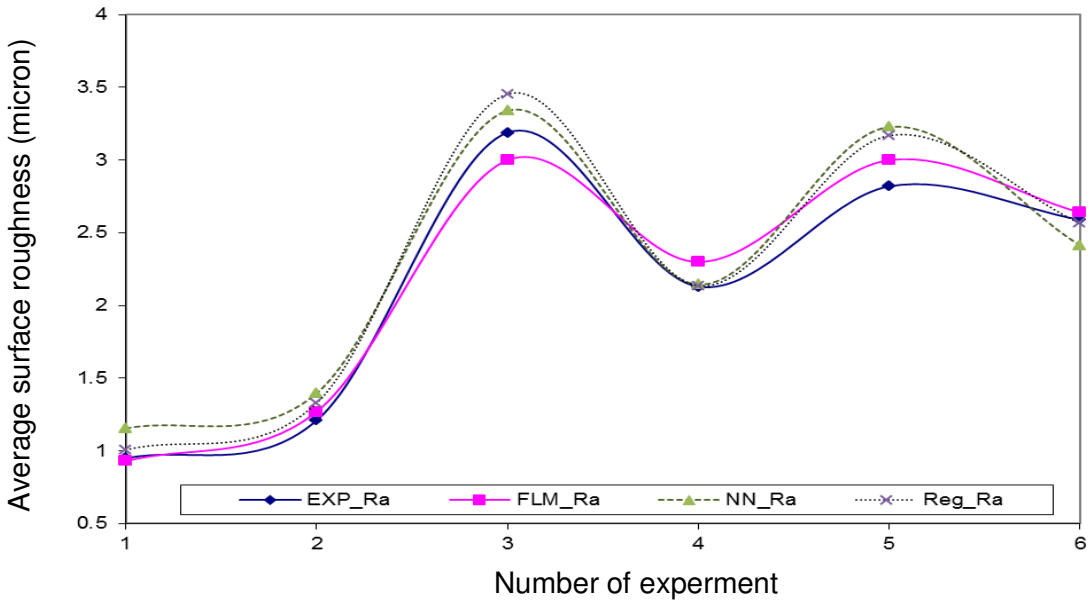

Figure 4. The comparison of experimental and predicted by ANN, FL, and Reg. Ra results.

the ANOVA and regression, the feedrate is the significant factor which contributes to the surface roughness. Based on the obtained values of MSE, the fuzzy logic model produced the best prediction of Ra, followed by the second order regression model, and then artificial neural network respectively. FL, ANN other artificial intelligence

methods may also be used successfully by increasing number of data. The study has established a base for continued research work.

Conclusion

In this study, the average surface roughness values (Ra) obtained in hard turning of AISI 4140 grade hardened steel were modeled successfully using multiple approaches, including FL, ANN and multi-regression. The developed predictive models have demonstrated the ability to accurately model surface roughness. Time, material and labor work may be saved by predicting surface roughness without experimental testing for intermediate values.

FL, ANN and statistically multi-regression models have significantly advanced as a result of advances in computer technology. They were used in this study for modeling a non-linear problem. These techniques can be applied in real-time process monitoring, optimization, model reference adaptive control and model predictive control in various manufacturing processes. The high accuracy of the results within a wide range of cutting parameters indicates that the system can be practically applied in industry. This work is unique about developing and comparing three different models.

ACKNOWLEDGEMENT

This work was supported by the Coordinatorship of Selcuk University's Scientific Research Projects.

REFERENCES

Abburi NR, Dixit US (2006). A knowledge-based system for the prediction of surface roughness in turning process. Robotics and Comp.-Integ. Manu., 22: 363-372.

Akkuş H (2010). Prediction of surface roughness in turning operations using artificial intelligence and statistical methods. MSc. Thesis, Selçuk University, Konya, Turkey.

Asilturk I, Cunkas M (2011). Modelling and prediction of surface roughness in turning operations using artificial neural network and multiple regression method. Expert Sys. Appl., 38(5): 5826-5832.

Asilturk I (2007). Adaptive Control Application Based on Artificial Intelligence in the Bandsawing Process. PhD. Thesis, Selcuk University, Konya, Turkey.

Asilturk I, Taşkıran U, Unuvar A (2006). Applications of intelligent control and monitoring at manufacturing. AMSE Proce.Int. Conf. 28-30 Agust, pp. 457-462, Konya, Turkey.

Aslan E, Camuşcu N, Bingören B (2007). Design optimization of cutting parameters when turning hardened AISI 4140 (63 HRC) with Al2O3+TiCN mixed ceramic tool, Mater. Design, 28: 1618-1622.

Bharathi RS, Baskar N (2010). Particle swarm optimization technique for determining optimal machining parameters of different work piece materials in turning operation, Int. J. Adv. Man. Technol., DOI 10.1007/s00170-010-2958-y.

Cakir MC, Ensarioglu C, Demirayaka I (2009). Mathematical modeling of surface roughness for evaluating the effects of cutting parameters and coating material. J. Mater. Proces. Technol., 209(1):102-109.

Chavoshi SZ, Tajdari M (2010). Surface roughness modelling in hard turning operation of AISI 4140 using CBN cutting tool. Int. J. Mater. Forming., 3(4): 233-239.

Davim JP, Gaitonde VN Karnik SR (2008). Investigations into the effect of cutting conditions on surface roughness in turning of free machining steel by ANN models. J. Mater. Processing Technol., 205: 16-23.

Dimla DE (1999). Application of perceptron neural networks to tool state classification in a metal turning operation. Eng. Appl. Art. Intel., 12: 471-477.

Findik T, Tasdemir S, Sahin I (2010). The use of artificial neural network for prediction of grain size of 17-4 pH stainless steel powders. Sci. Res. Essays., 5(11): 1274-1283.

Gupta AK (2010). Predictive modeling of turning operations using response surface methodology artificial neural networks and support vector regression. Int. J. Man. Technol., 48: 763-778.

İlkaz S (2002). Cutting condition determination for CNC turning operations using fuzzy logic. MSc. Thesis, Süleyman Demirel University, Isparta, Turkey.

Karayel D (2009). Prediction and control of surface roughness in CNC lathe using artificial neural network. J. Mater. Processing Technol., 209: 3125-3137.

Lin WS, Lee BY, Wu CL (2001). Modeling the surface roughness and cutting force for turning, J. Mater. Processing Technol., 108: 286-293.

Neseli S, Tasdemir S, Yaldız S (2009). With artificial neural network approach to predict surface roughness in turning. J. Eng. Arch. Faculty Esk. Osmangazi Univ., 2(3):65-75.

Ozdeniz AH, Yilmaz N (2009). Artificial Neural Network Modeling of the Spontaneous Combustion Occurring in the Industrial-scale Coal Stockpiles with 10-18 mm Coal Grain Sizes. Ener.Sources, Part A: Recovery, Uti. Environ. Eff., 31: 1425-1435.

Ozel T, Karpat Y (2005). Predictive modeling of surface roughness and tool wear in hard turning using regression and neural networks. Int. J. Mach. Tools. Man., 45: 467-479.

Ozkan İA (2006). Predicting of cutting forces and tool tip temperature in turning using fuzzy logic and artifitical neural network techniques. MSc. Thesis, Selcuk Univ, Konya, Turkey.

Reddy BS, Padmanabhan G, Reddy KVK (2008). Surface Roughness Prediction Techniques for CNC Turning, Asian J.Sci. Res., 1(3),256-264.

Risbood KA, Dixit US, Sahasrabudhe AD (2003). Prediction of surface roughness and dimensional deviation by measuring cutting forces and vibrations in turning process. J. Mater. Processing Technol., 132: 203-214.

Rosales A, Vizán A, Diez E, Alanís A (2010). Prediction of Surface Roughness by Registering Cutting Forces in the Face Milling Process. Eur. J. Sci.Res., 41(2):228-237.

Samanta B, Erevelles W, Omurtag Y (2008). Prediction of workpiece surface roughness using soft computing. J. Proc. Inst. Mech. Eng. Part B: J. Eng. Man., 222(10): 1221-1232.

Singh D, Rao PV (2007). A surface roughness prediction model for hard turning process. Int. J. Adv. Manuf. Technol., 32: 1115-1124.

Zhang J, Chen J (2007). The development of an in-process surface roughness adaptive control system in end milling operations. Int. J. Adv. Man. Technol., 31: 877-887.