Scientific Research and Essays Vol. 5(13), pp. 1754-1758, 4 July, 2010
Available online at http://www.academicjournals.org/SRE
ISSN 1992-2248 ©2010 Academic Journals

Full Length Research Paper

Remote electronic experiments using LabVIEW over controller area network

Akif Kutlu* and Kubilay Taşdelen

Faculty of Technical Education, Suleyman Demirel University, Isparta, Turkey.

Accepted 4 June, 2010

Remote laboratories are essential for many distance learning institutions in the area of engineering. There are useful experimental sets proposed by researchers in different scientific areas. The structure of remote laboratories is still under development. This paper presents an electronic laboratory controlled by a server operated with LabVIEW software. Controller area network (CAN), behind the server computer, provides multiple experimental sets running simultaneously. This architecture allows controlling multiple modules over a network using only one server computer.

Key words: Remote laboratory, engineering education, controller area network.

INTRODUCTION

Laboratories in engineering and applied science have important effects on student learning. Most educational institutions construct their own laboratories individually. Alternatively, some institutions established laboratories, which can be conducted remotely via internet (Kutlu, 2004; Ko et al., 2001a, b; Ko et al., 2000). Examples of remote laboratories can be seen in different scientific areas such as power electronics (Baurer et al., 2008), motor control (Yeung and Huang, 2003), food engineering (Palou et al., 2005), chemical engineering (Klein and Wozny, 2006) etc. Researchers compared remote laboratories with modern ones in many ways (Nedic et al., 2003) and studied trends in remote laboratories (Gomes and Bogosyan, 2009). There is an ongoing debate on the advantages and disadvantages of remote laboratories. It is, however, obvious that remote laboratories are essential for institutions related to distance education. These laboratories are also useful for traditional educational institutions in accessing the experiments both during the day and night time.

Researchers proposed different hardware and software architectures for remote laboratories. General structure of a remote laboratory is almost the same in every academic research: Remote clients, a server computer equipped with an IO module and remote experimental setup connected to the server are main parts of a whole system.

Software running on the remote laboratory system can be categorized into two groups: Software packages such as LabVIEW and HPVee (Shen and Xu, 1999) and software programs such as C# and Java. These programs use TCP/IP links for remote connections. LabVIEW is a popular programming environment in academic institutions and industry (Yang et al., 2005). Its virtual instrument (VI) is a graphical programming language specifically designed for developing instru-mentation, diagnostics, and data acquisition systems (Vargas and Moreno, 2009). It is used for remote connection in many areas such as power engineering (Albu et al., 2004), electronic measurement (Chirico and Scapolla, 2005), motor control (Sibigtroth and Montanez, 2005; Puerto et al., 2009), and engineering measurement (Restivo et al., 2009).

LabVIEW is mostly used to conduct experimental sets using data acquisition (DAQ) cards. This limits the number of experiments connected to server computer. The purpose of this paper is to show the possibility of using an industrial network with LabVIEW in order to increase the remotely controlled number of experimental sets.

*Corresponding author. E-mail: akutlu@hotmail.com. Tel: +902462111478. Fax: +902462111477.

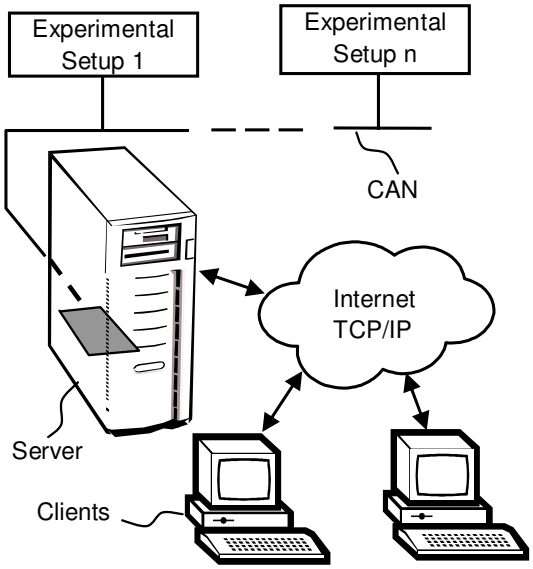

Figure 1. Architecture of a remote laboratory.

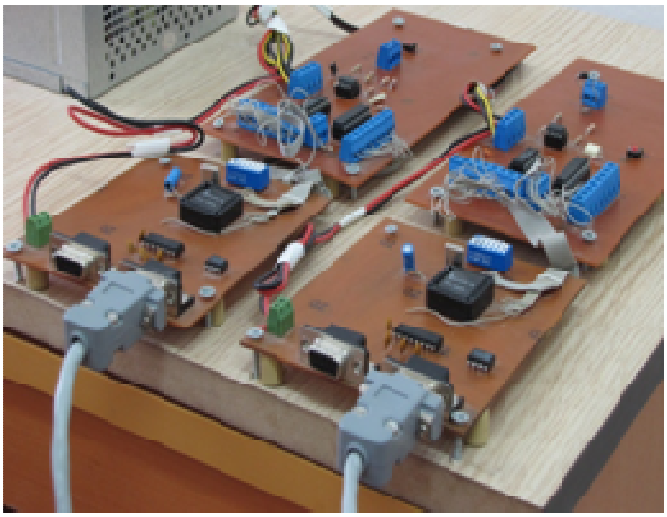

Figure 2. Experimental sets.

HARDWARE ARCHITECTURE

As Figure 1 illustrates, the architecture of the remote laboratory consists of a server computer with an industrial network card. Since the network card is plugged in a PCI slot, it is called PCIcan card. It provides required protocol operations for controller area network. The LabVIEW drivers for the PCIcan card are provided by Kvaser Company.

Two experimental sets are designed and implemented for remote electronic laboratory. Figure 2 shows these experimental sets. They measure diode and transistor characteristics, respectively. Connection between server and experimental sets is provided by CAN.

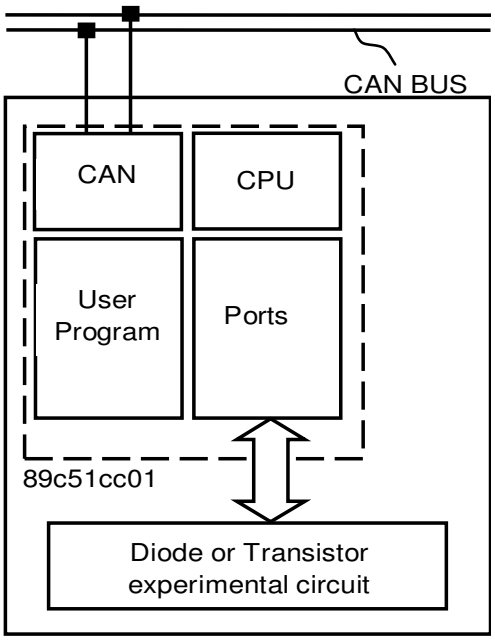

Figure 3. Block diagram of an experimental set.

Each experimental set has one microcontroller and experimental circuit as shown in Figure 3. Both experimental sets have Atmel's 89c51cc01 micro-controller with one chip CAN. Microcontrollers provide electrical values for the experiment using digital to analog converter (DAC) component. The values are given by the user via internet and CAN. Microcontrollers also measure the output of circuit using analog to digital converter (ADC) component and send back obtained values to the user through CAN and internet.

CAN is a serial data communication protocol for industrial applications (Othman et al., 2006). It is primarily used for automotive environment (Bosch and Gmb, 1991). The main feature of the CAN is its bus access method. It has prioritized arbitration mechanism (Kiencke, 1994; Lawrenz, 1995). In this system, each message has a unique identifier, which defines the type of data such as speed, temperature, pressure or any other data in the selected application. In addition, the digital value of the identifier automatically defines the message priority for bus access. Small ID number stands for higher priority. The maximum bus speed may be 1 Mb/s.

Another feature of the protocol is its multi-master bus architecture (Intel, 1993), which provides more experimental sets to be connected to the network.

With its reliability and excellent error detection mechanisms, CAN-based networks compete with protocols such as Interbus, Profibus, LON and VAN. It is considered superior to other networks available on the market. Detailed description of protocol operation can be found in (Cena and Valenzano, 1999).

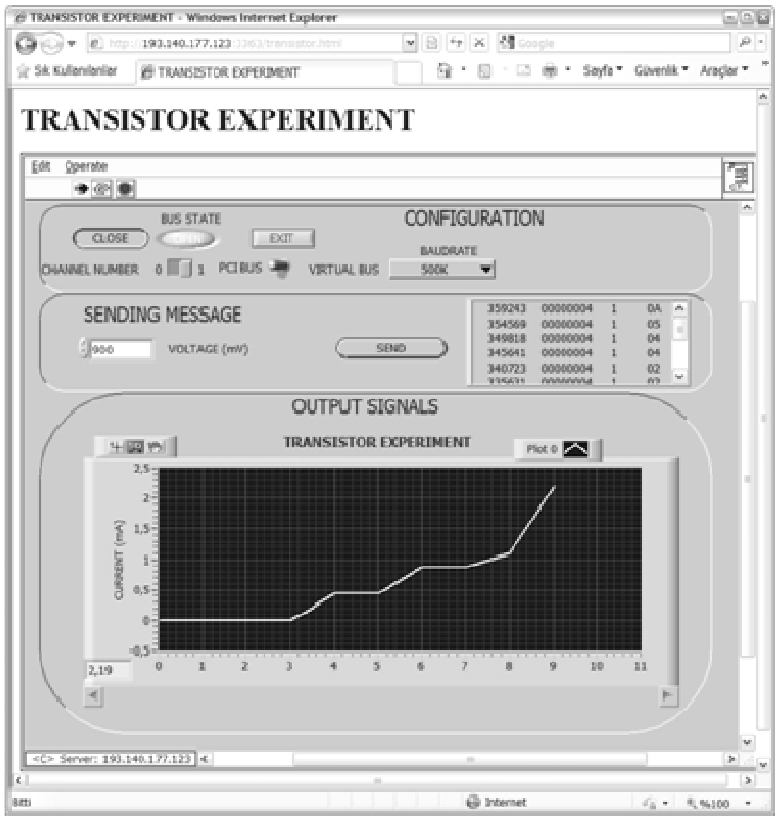

Figure 4. LabVIEW user interface.

SOFTWARE ARCHITECTURE

The software of a whole system is divided into two groups: User interface and firmware. Figure 4 shows the user interface of the remote laboratory.

The user interface consists of three sections including, configuration, send data and receive data. In the configuration section, user can initialize and setup CAN-BUS, open and close CAN communication, manage CAN speed and activate CAN-BUS. This is accomplished by the first part of VI block diagram as shown in Figure 5. Sent data section transfers numerical values for the electric circuit through internet and CAN (second part). Obtained values from the circuit are shown in the received data section (third part).

Once the user interface is published using web publishing tool in the LabVIEW, anyone can access the experimental setup through internet. However, only first user can conduct the experimental set. The others are only able to observe the results.

The user interfaces for each experimental set are designed separately. It means that both experimental sets are controlled individually; hence, controlling of the experimental sets does not interfere with each other. Using an industrial network behind server computer, as mentioned in the earlier section, increases the number of experimental sets. Although there are only two experimental sets implemented, the architecture allows 112 nodes based on CAN transceiver parameters (Eisele and Jöhnk, 1996).

In order to send and receive data from experimental sets, CAN message frames, as shown in Figure 6, must be used. LabVIEW is able to send and receive these frames with Kvaser's PCI-CAN card drivers. The controlling of the CAN card is similar to other data acquisition (DAQ) cards. Since a CAN message ID is 11 bit long, some of the bits can be grouped for experimental sets. It helps determine which frames to be allocated for experimental sets.

For the fact that two of the most significant bits are reserved for class implementation, it is possible to create four individual experimental laboratories. Each laboratory may have a maximum of 32 experimental modules since the following five consecutive bits are reserved for module numbers. Finally, the remaining four bits are reserved for commands. Therefore, each experimental module can have up to sixteen different commands. For example, ID 12 h and 22 h is used to send data from server to experimental sets, respectively. ID 11h and 21h is used to receive data from experimental sets. If there is another experimental set implemented, the IDs 31 h for receiving data and 32 h for sending data must be allocated according to the above organization.

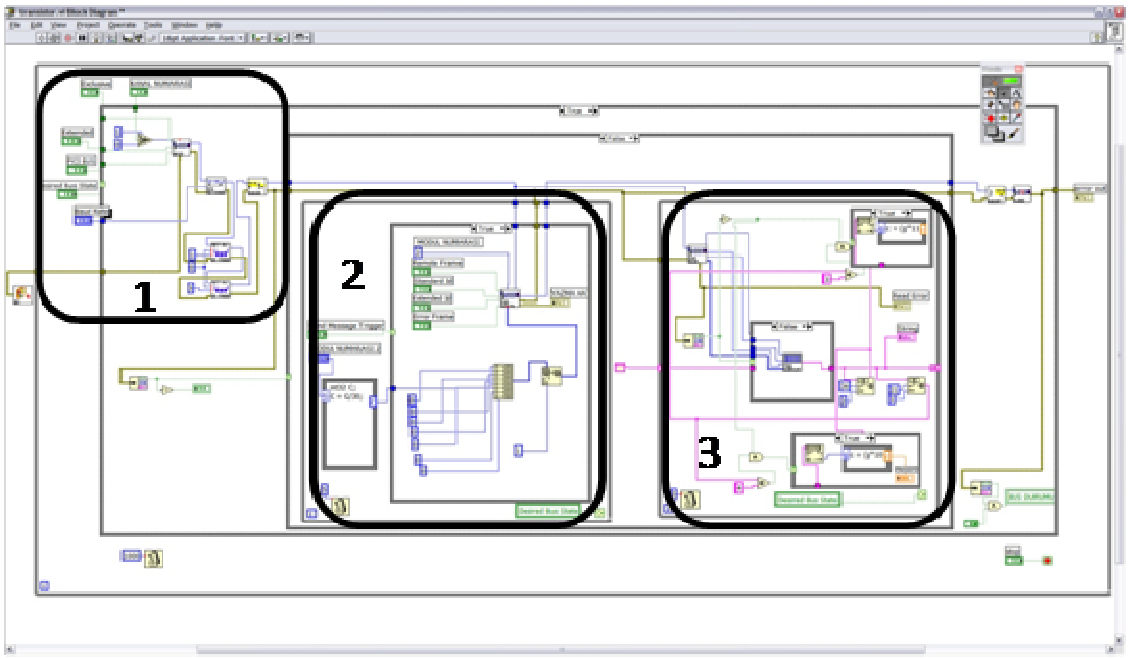

Figure 5. Block diagram of server software.

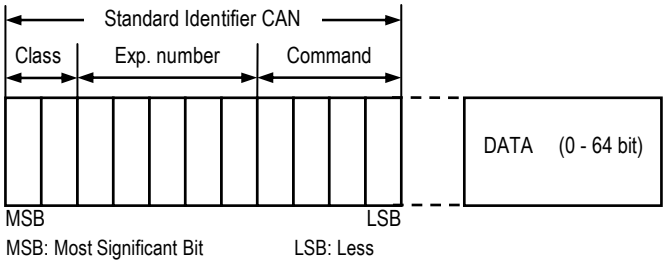

Figure 6. Frame format.

The microcontroller has two states: Idle and run. In the idle mode, the designed firmware running on the microcontroller waits for the send data frame. The microcontroller also receives other frames on the network but discards them since they do not belong to it. When microcontroller receives the correct frame, it switches from idle to running mode. In the running mode, microcontroller provides values for the electrical circuit and receives back the result from AD converter. The value, obtained from the circuit, is sent to the server via CAN. Finally, microcontroller gets back to idle mode and waits for the next send data frame.

CONCLUSION

This paper presents LabVIEW controlled remote electronic laboratory. The laboratory consists of two experimental sets but can theoretically be extended up to 112 nodes. This paper showed that using an industrial network with LabVIEW increases the number of remotely accessed experimental sets using only one server computer. The architecture can also be adapted to other remotely controlled laboratories such as motor control laboratory and electronic measurement laboratory. Since the controlling unit consists of 8051 based microcontroller, the architecture may also combine different laboratory experimental modules in the same network.

REFERENCES

Albu MM, Holbert KE, Heydt GT, Grigorescu SD,Trusca V (2004). Embedding remote experimentation in power engineering education, IEEE Trans. Power Syst., 19(1): 139-143.

Baurer P, Fedak V, Hajek V, Lampropoulos I (2008). Survey of distance laboratories in power electronics, IEEE Power electronics specialist conference. pp. 430-436.

Bosch R, Gmb H1(1991).CAN Specification Version 2.0,

Cena G, Valenzano A (1999). “Efficient implementation of semaphores in controller area networks”, IEEE Trans. on Ind. Elect., 46(2): 417-428.

Chirico M, Scapolla AM (2005). “ A new and open model to share laboratories on the internet”, IEEE Trans. Instrum. Meas., 54(3): 1111-1117.

Eisele H, Jöhnk E (1996). PCA82C250/251 CAN Transceiver, Philips, Eindhoven, The Netherlands, Appl. Note AN96116.

Gomes L, Bogosyan S (2009). Current Trends in Remote Laboratories, IEEE Trans. Ind. Elect., 56 (12): 4744-4756.

Intel (1993). 82527 Serial Communications Controller Architectural Overview, Intel, Santa Clara, CA, Oct.

Kiencke U (1994). “Controller area network—From concept to reality,” in Proc. ICC, Germany, 0(11):0-19.

Klein A, Wozny G (2006). Web Based remote experiments for chemical

engineering education. Educ. Chem. Eng., 1: 134-138.
Ko CC, Chen BM, Chen J, Zhuang Y, Tan KC (2001a). Development of a web-based laboratory for control experiments on a coupled tank apparatus, IEEE Trans. Educ., 44(1): 76-86.
Ko CC, Chen BM, Chen SH, Ramakrishnan V, Chen R, Hu SY, Zhuang Y (2000). A large-scale Web-based virtual oscilloscope laboratory experiment, Eng. Sci. Educ. J., 9(2): 69-76.
Ko CC, Chen BM, Hu SY, Ramakrishnan V, Cheng CD, Zhuang Y, Chen J (2001b). A web-based virtual laboratory on a frequency modulation experiment, IEEE Trans. Syst., Man, Cybern. C, Appl. Rev., 31(3): 295-303.
Kutlu A (2004). "Microlab: A web based remote microcontroller laboratory for engineering education," Int. J. Eng. Educ., 20(5): 879-885.
Lawrenz W (1995). World-wide status of CAN-Present and future, in Proc. ICC, 0(12): 0-25.
Nedic Z, Machotka J, Nafalski A (2003). Remote laboratories versus virtual and real laboratories, Proc. Frontiers Educ.Conf., Nov. 5(8): 1 T3E-1–T3E-6.
Othman HF, Aji YR, Fakhreddin FT, Al-Ali AR (2006). Controller Area networks: Evaluation and Applications, Information and Communication Technologies, ICTTA '06(2): 3088-3093.
Puerto R, Jiménez LM, Reinoso O (2009). Remote Control laboratory via internet using matlab and simulink , Computer App. Eng. Educ., DOI: 10.1002/cae20274.
Restivo MT, Mendes J, Lopes AM, Silva CM, Chouzal F (2009). "A remote laboratory in Engineering Measurement" IEEE Trans. Ind. Elect., 56(12): 4836-4843.
Shen H, Xu Z (1999). Conducting laboratory experiments over the internet, IEEE Trans. Educ. , 42(3): 180-185.
Sibigtroth J, Montanez E (2005). Motor control demonstration Lab. Int. J. Eng. Educ., 21(1): 84-93.
Vargas H, Moreno S (2009). Web enabled remote scientific environment, Comput. Sci. Eng., 11(3): 36-46.
Yang F, Li G, Li H (2005). Design and development of a remote temperature monitor system of web using virtual instruments, CISSE 2005, pp. 449-452.
Yeung K, Huang J (2003). "Development of a remote Access laboratory: a dc motor control experiment," Comp. in Industry, 52(3): 305-311.